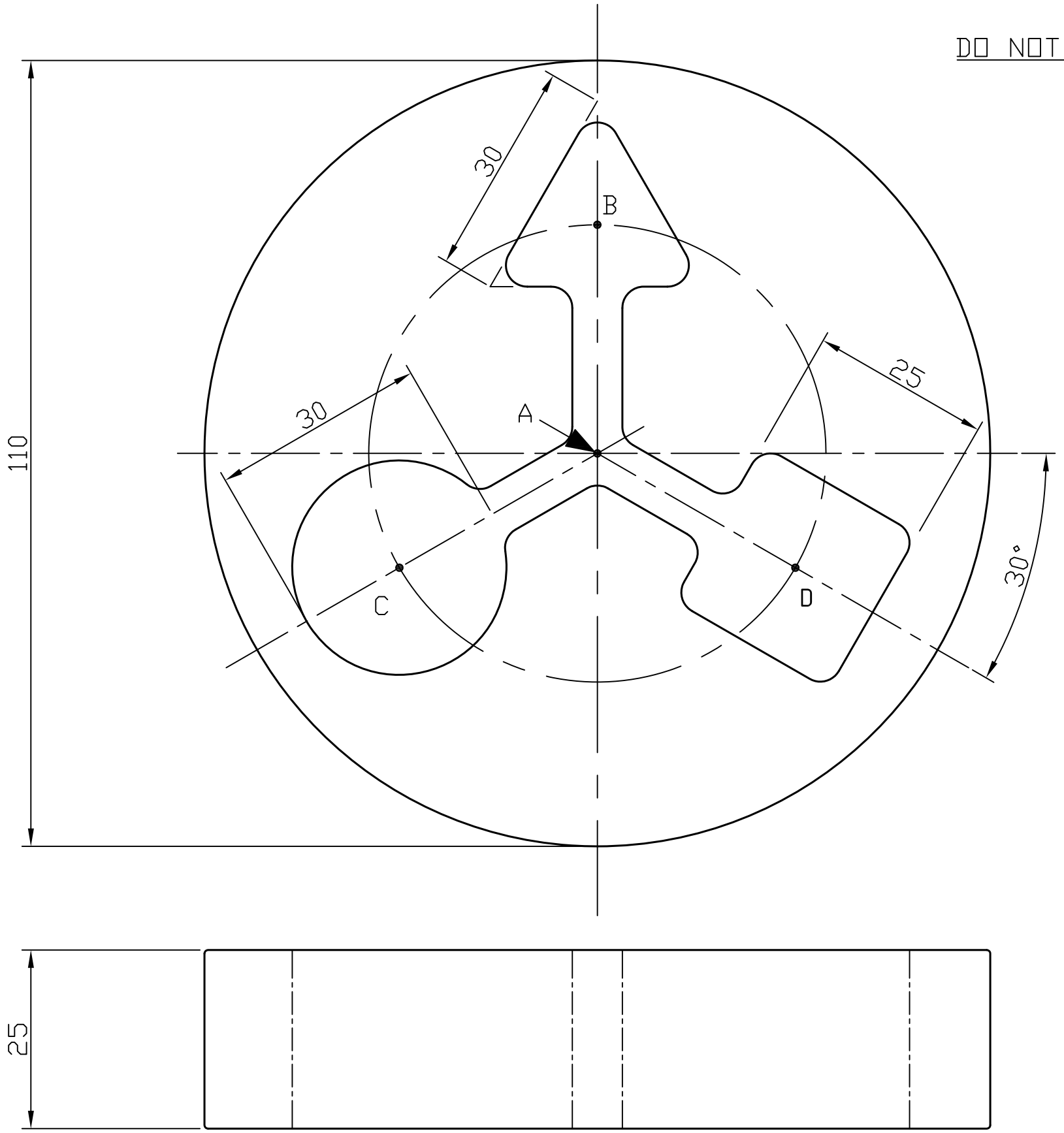

DO NOT SCALE

1. DRILL CENTRE HOLE "A"≈ 7 MM DIA. DRILL "B", "C", "D" ≈ 3 MM DIA

2. CUT OUT DISK

3. CUT OUT INTERNAL OUTLINE

4. SEPARATE CIRCLE "C" : SQUARE "D" : TRIANGLE "B"

5. SAND SURFACE. APPROXIMATE FINISHED DIMENSIONS OF B, C & D IN DETAIL 1

6. THREAD B, C, D ON A CONTINUOUS STRING THROUGH DISK

DETAIL 1

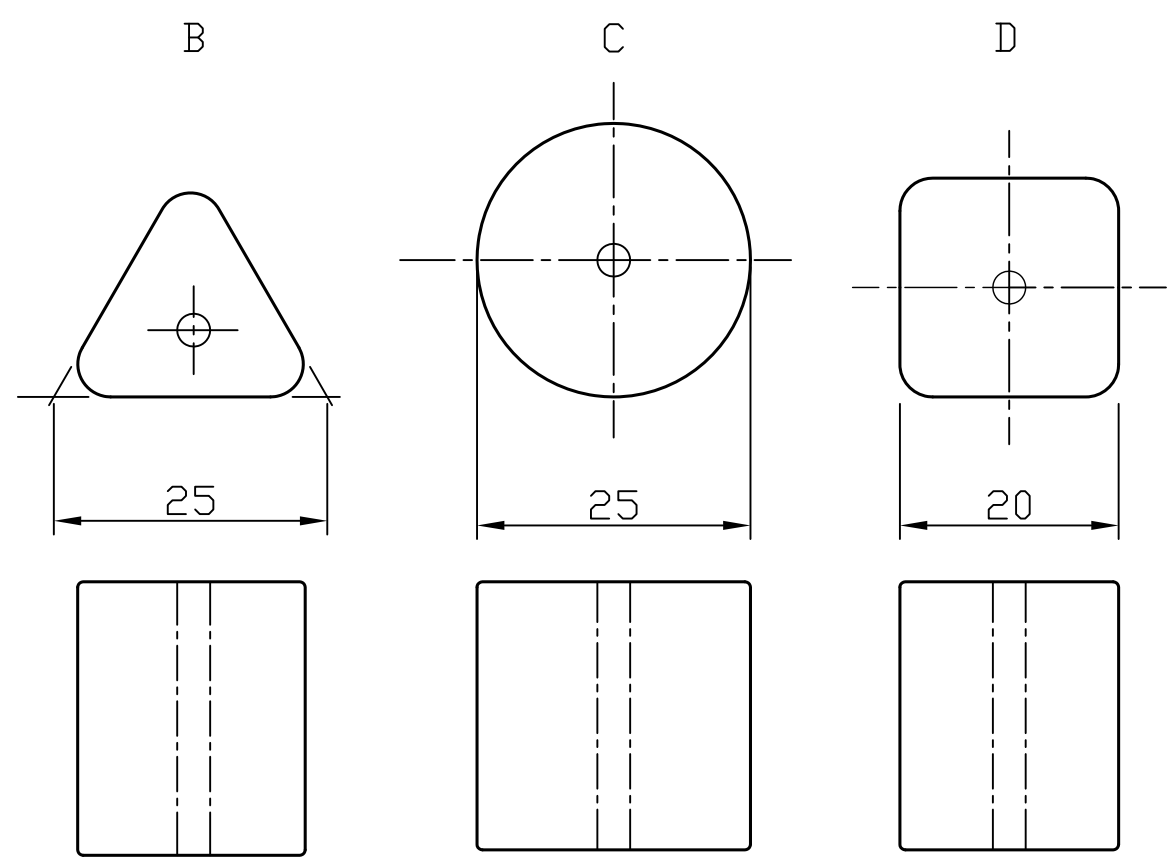

TOLERANCES
UNLESS OTHERWIS
STATED +/_ 0.5

C1 THREADING SHAPES

No.	Description	CHK	AP'D	DATE

REVISIONS

Practical Action
www.practicalaction.org
infoserv@practicalaction.org.uk

TITLE EDUCATIONAL WOODEN TOYS

DIMENSIONS IN MM

DESIGN	DRAWN	CHK
TG-	NN-	-

DRAWING No. EWT001

NOT TO SCALE